ANALYZE FOR SAFETY, ECOLOGY, AND MINIMUM ESSENTIAL DESIGN

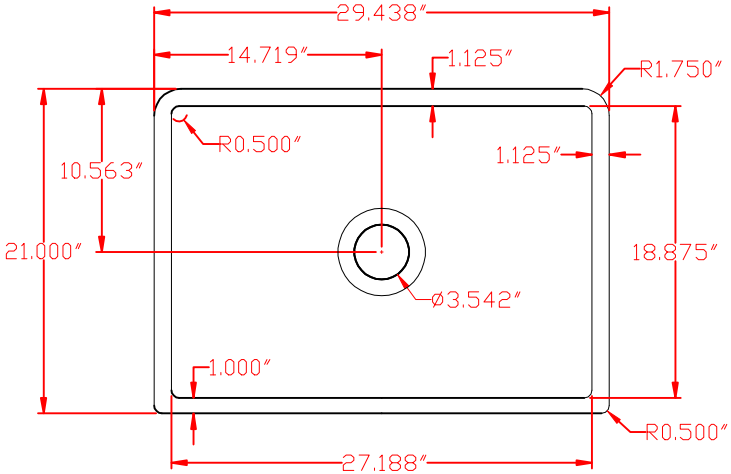

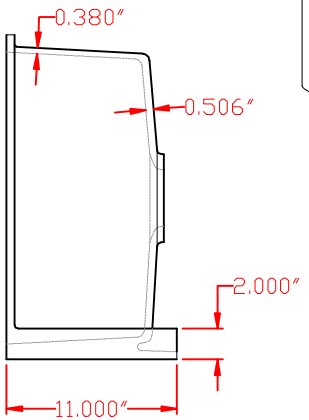

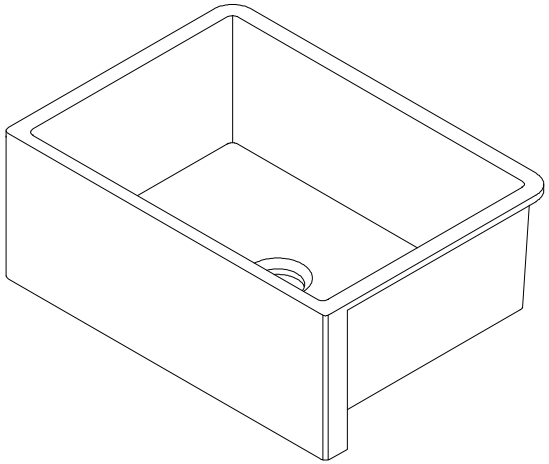

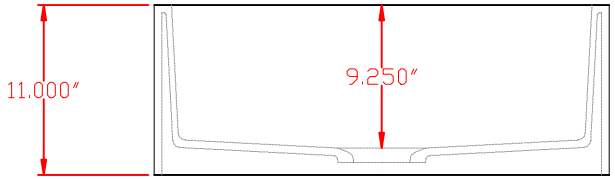

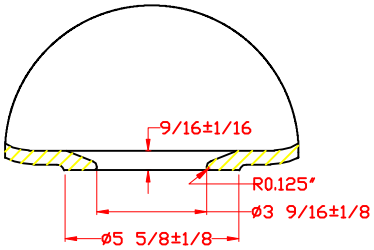

Drain Detail

LAST REV

TYPE		LAST REV
36		

PROJ	NO	REVISION	RVSD	CHKD	APPD	DATE	PROJ	NO	REVISION	RVSD	CHKD	APPD	DATE	PROJ	NO	REVISION	RVSD	CHKD	APPD	DATE	PROJ	NO	REVISION	RVSD	CHKD	APPD	DATE	DWGS	STDS

TOLERANCE ON ALL DIMENSIONS, UNLESS OTHERWISE NOTED, TO BE:
ANGLES ±0°-30′
FRACTIONS 1/16″
DECIMALS ONE PLACE = ±.05 IN.
TWO PLACE = ±.01 IN.
THREE PLACE = ±.005 IN.
ALL DIMENSIONS ARE IN INCHES, UNLESS NOTED.
THIRD ANGLE PROJECTION

THIS DRAWING HAS BEEN FURNISHED BY E. I. DU PONT DE NEMOURS & CO. THE INFORMATION AND KNOW-HOW THEREIN MAY NOT BE USED NOR THE DRAWING REPRODUCED WITHOUT THE WRITTEN PERMISSION OF DU PONT. ALL REPRODUCTIONS IN WHOLE OR IN PART, INCLUDING VENDOR'S SHOP DRAWINGS, SHALL BEAR OR REFER TO THIS STAMP.

PROJECT

SCALE ..... DATE
DRAWN.....
CHECKED.....
APPROVED.....
DESIGN RELEASE
APPROVED.....
CONTROL RELEASE

DUPONT
E. I. DU PONT DE NEMOURS & CO., INC.